University of Amsterdam
Amsterdam Center for Language and Communication

NWO
Nederlandse Organisatie voor Wetenschappelijk Onderzoek

A meta-analysis on procedural learning in SLI

Imme Lammertink, Paul Boersma, Frank Wijnen & Judith Rispens

EUCLDIS | 12 May 2016

University of Amsterdam
Amsterdam Center for Language and Communication

NWO
Nederlandse Organisatie voor Wetenschappelijk Onderzoek

Introduction

Procedural learning deficit hypothesis
(Ullman & Pierpont, 2005)

Procedural learning
Discovery of rules without explicit or formal instruction to these rules
(Ullman, 2004)

Grammar acquisition
Procedural learning in SLI

Literacy acquisition
Procedural learning in dyslexia - Merel v. Witteloostuijn

Imme Lammertink | i.l.lammertink@uva.nl
www.progracy.com

University of Amsterdam
Amsterdam Center for Language and Communication

NWO
Nederlandse Organisatie voor Wetenschappelijk Onderzoek

Introduction

Procedural learning deficit hypothesis
(Ullman & Pierpont, 2005)

Visual non-verbal domain

Auditory verbal domain

CORTEX 51 (2014) 1–10

Study	SMD	Variance	95% C.I. Lower	95% C.I. Upper	*p*-value	Weight
Gabriel et al. (2011)	-.582	.13	-1.29	.13	.107	9.9%
Gabriel et al. (2012)*	.298	.14	-.43	1.02	.420	9.5%
Gabriel et al. (2013)	.500	.09	-.09	1.09	.095	12.9%
Gabriel et al. (in press)	.240	1.26	-.46	.94	.499	10.1%
Lum & Bleses (2012)	.582	.13	-.13	1.29	.109	9.8%
Lum et al. (2012)	.448	.04	.05	.84	.026*	20.5%
Lum et al. (2010a)	.945	.15	.18	1.71	.016*	8.7%
Tomblin et al. (2007)	.202	.05	-.23	.63	.356	18.7%
Weighted Average	**.328**	**.02**	**.07**	**.58**	**.012***	

Notes: *Effect size is the average of results over two conditions. In one condition participants completed the SRT Task using response pad as an input device and in the second participants used a touchscreen.
*$p < .05$; **$p < .001$

Imme Lammertink | i.l.lammertink@uva.nl
www.progracy.com

University of Amsterdam
Amsterdam Center for Language and Communication

NWO
Nederlandse Organisatie voor Wetenschappelijk Onderzoek

Introduction

Statistical Learning designs

Unconscious detection and extraction of statistical structures in the language input (Romberg & Saffran, 2013)

- Sound categorization [ta] [da]
- Word segmentation Doyouseethekitty Doyouhavetheball
- Grammatical structures He vacuums Yesterday he walked

Imme Lammertink | i.l.lammertink@uva.nl
www.progracy.com

University of Amsterdam
Amsterdam Center for Language and Communication

NWO
Nederlandse Organisatie voor Wetenschappelijk Onderzoek

Introduction

Experimental designs

Exposure phase

Word segmentation

Saffran et al. (1996)
Dehaene et al. (2016)

Test phase

Lexical decision

Tokibu? Gitobu?

Imme Lammertink | i.l.lammertink@uva.nl
www.progracy.com

University of Amsterdam
Amsterdam Center for Language and Communication

NWO
Nederlandse Organisatie voor Wetenschappelijk Onderzoek

Introduction

Experimental designs

Exposure phase

Word segmentation

Saffran et al. (1996)
Dehaene et al. (2016)

Grammatical structures

Tep	X	lut
Sot	X	jik
Pel	X	rud

Gomez (2002)

Test phase

Lexical decision

Tokibu? Gitobu?

Imme Lammertink | i.l.lammertink@uva.nl
www.progracy.com

University of Amsterdam
Amsterdam Center for Language and Communication

NWO
Nederlandse Organisatie voor Wetenschappelijk Onderzoek

Introduction

Experimental designs

Exposure phase

Word segmentation

Saffran et al. (1996)
Dehaene et al. (2016)

Grammatical structures

Tep	wadim	lut
Sot	domo	jik
Pel	kasi	rud

Gomez (2002)

Test phase

Lexical decision

Tokibu? Gitobu?

Grammaticality judgment

Tep wadim lut?
Tep wadim jik?

Imme Lammertink | i.l.lammertink@uva.nl
www.progracy.com

University of Amsterdam
Amsterdam Center for Language and Communication

NWO
Nederlandse Organisatie voor Wetenschappelijk Onderzoek

Introduction

Experimental designs

Exposure phase

Word segmentation

tokibugikobagopilagikobatokibugopila ...

Saffran et al. (1996)
Dehaene et al. (2016)

Grammatical structures

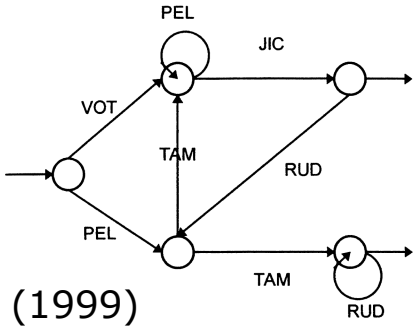

Gomez and Gerken (1999)

Test phase

Lexical decision

Tokibu? Gitobu?

Imme Lammertink | i.l.lammertink@uva.nl
www.progracy.com

Introduction

VOT PEL JIC
PEL TAM PEL PEL JIK
PEL VOT PEL TAM

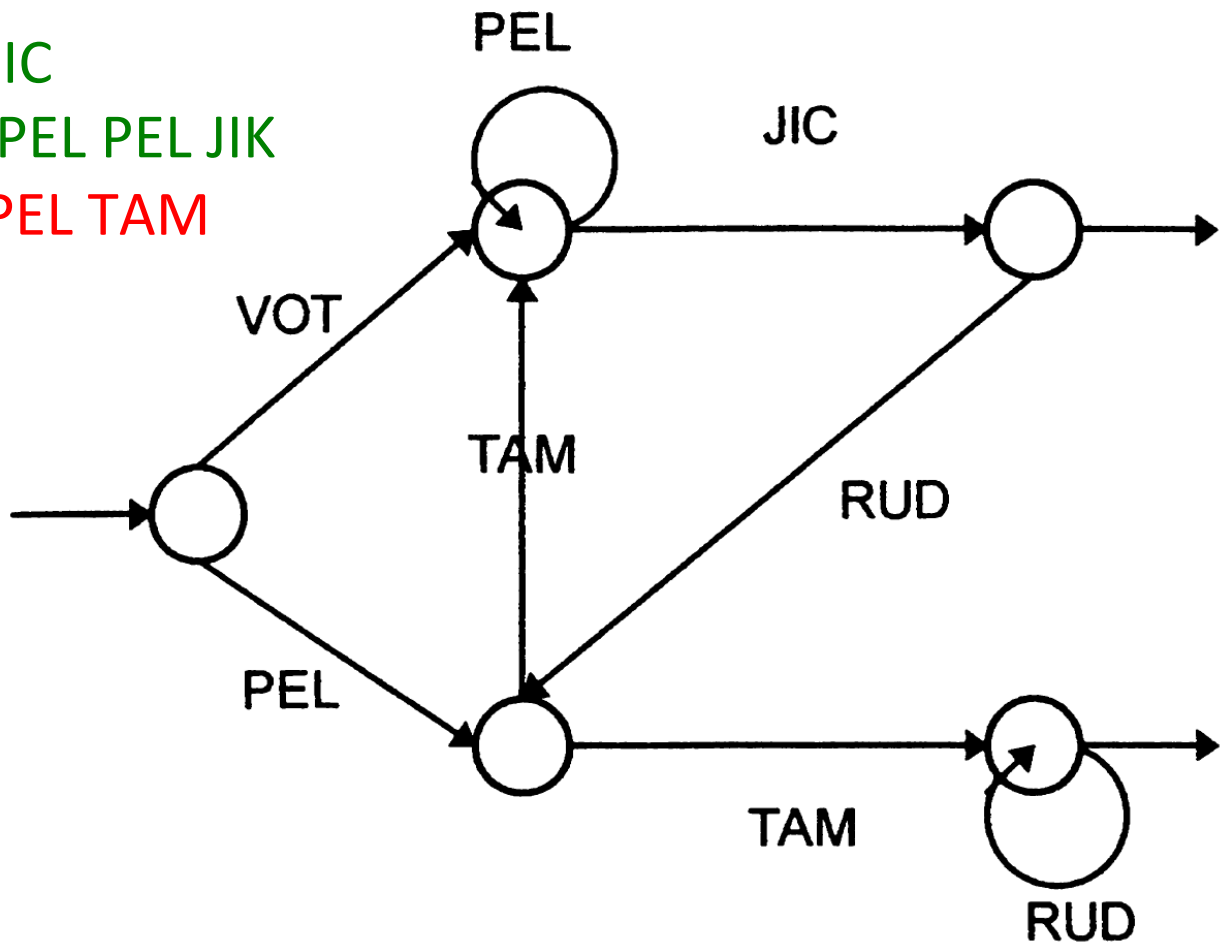

Research Question

A meta-analytic approach

1. How robust is the difference in performance on auditory verbal statistical learning tasks in individuals with and without SLI?

2. Word segmentation versus grammatical structures

Imme Lammertink | i.l.lammertink@uva.nl
www.progracy.com

Methods

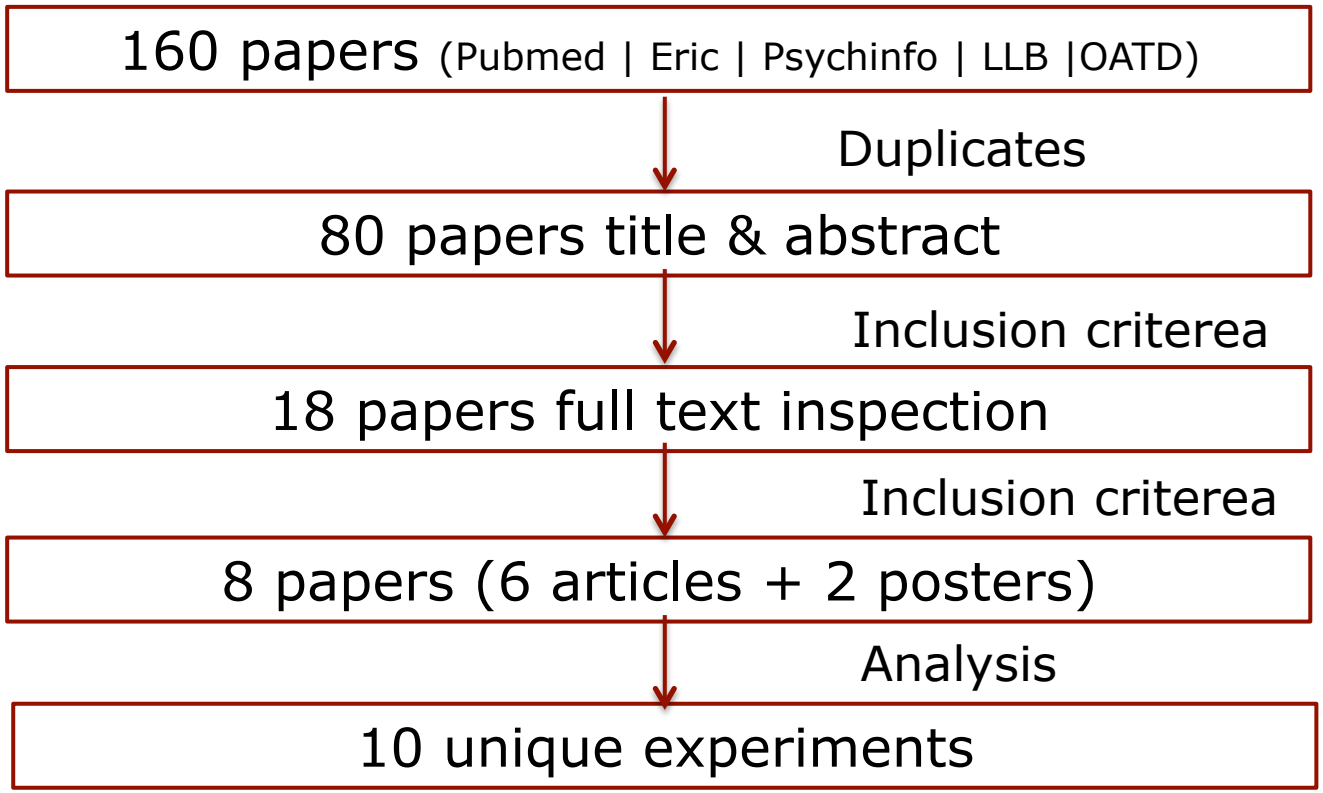
160 papers (Pubmed | Eric | Psychinfo | LLB |OATD)
Duplicates
80 papers title & abstract
Inclusion criterea
18 papers full text inspection
Inclusion criterea
8 papers (6 articles + 2 posters)
Analysis
10 unique experiments

Methods

Sample description

Period
2006 – 2015

Participants (9 – 16 years)
SLI: 237 participants
Controls: 391 participants

Linguistic level
Grammatical (N = 6)
Lexical (N= 4)

Methods

Effect size calculations

Overall accuracy: Correct acceptances + correct rejections

Standardized mean difference: Hedge's g
Mean scores + pooled SD

Results

Publication bias

No publication bias:
t(8) = 1.1165, *p* = 0.2966

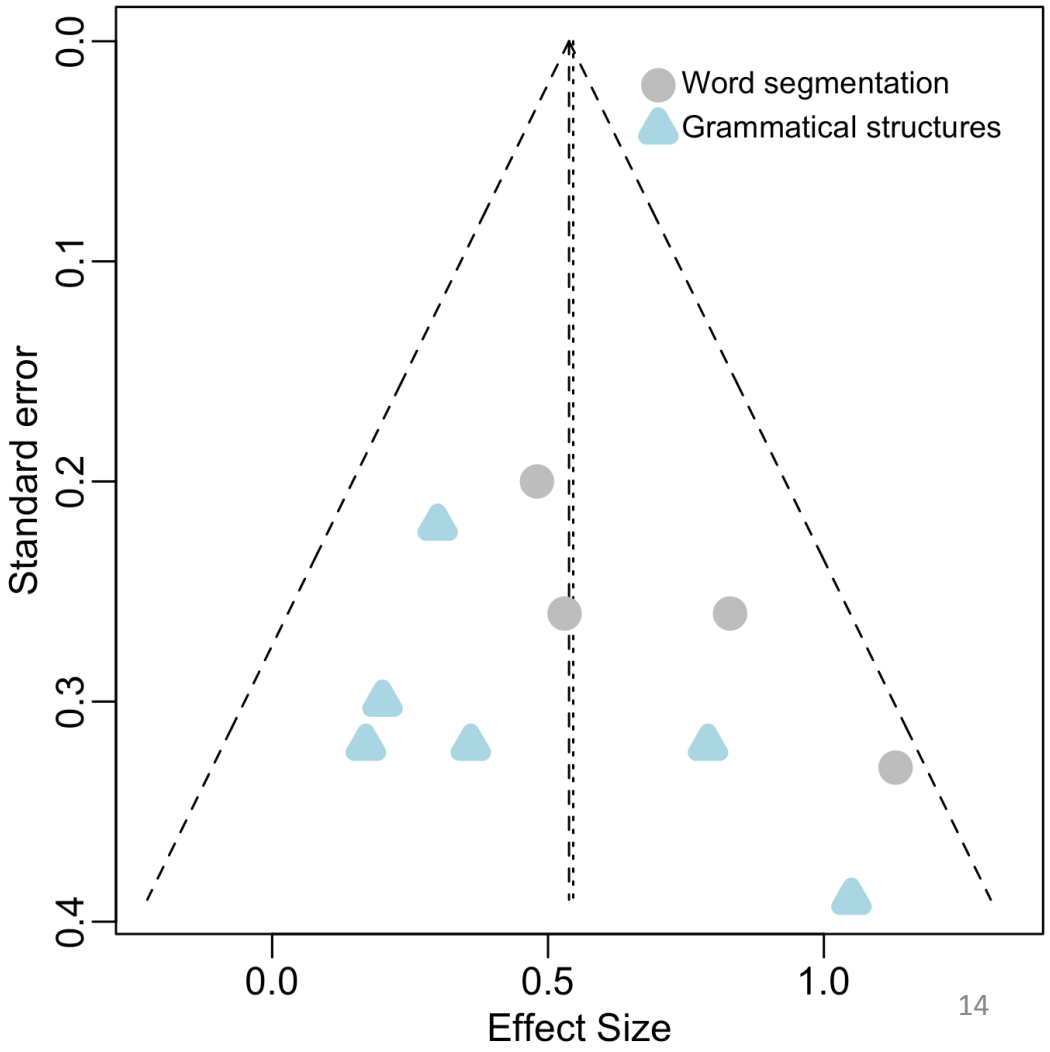

University of Amsterdam
Amsterdam Center for Language and Communication

NWO
Nederlandse Organisatie voor Wetenschappelijk Onderzoek

Results

Study	Mean age (years)	Dependency relation	p-value	Weight	Hedge's g [95% CI]
Grammatical structures					
Grunow et al. (2006)[b]	18.8	Non-Adjacent	0.5	9%	0.20 [-0.39 , 0.79]
Hsu et al. (2014)[c]	14.0	Non-Adjacent	0.02	8%	0.79 [0.17 , 1.41]
Hsu et al. (2014)[d]	14.1	Non-Adjacent	0.26	8%	0.36 [-0.26 , 0.98]
Hsu et al. (2014)[e]	14.0	Non-Adjacent	0.6	8%	0.17 [-0.45 , 0.79]
Lukacs & Kemeny (2014)	9.1	Adjacent	0.17	15%	0.30 [-0.14 , 0.74]
Evans et al. (2010)	16.0	Adjacent	0.01	5%	1.05 [0.29 , 1.81]
Word segmentation					
Heabig et al. (2015)	10.4	Adjacent	0.06	11%	0.53 [0.01 , 1.05]
Mayor-Dubois et al. (2014)	10.0	Adjacent	<.001	11%	0.83 [0.31 , 1.35]
Mainela-Arnold & Evans (2014)	9.9	Adjacent	<.001	7%	1.13 [0.48 , 1.78]
Evans et al. (2009)[a]	8.8	Adjacent	0.02	19%	0.48 [0.09 , 0.87]
Weighted estimated random effect size for all studies					0.54 [0.36 0.73]

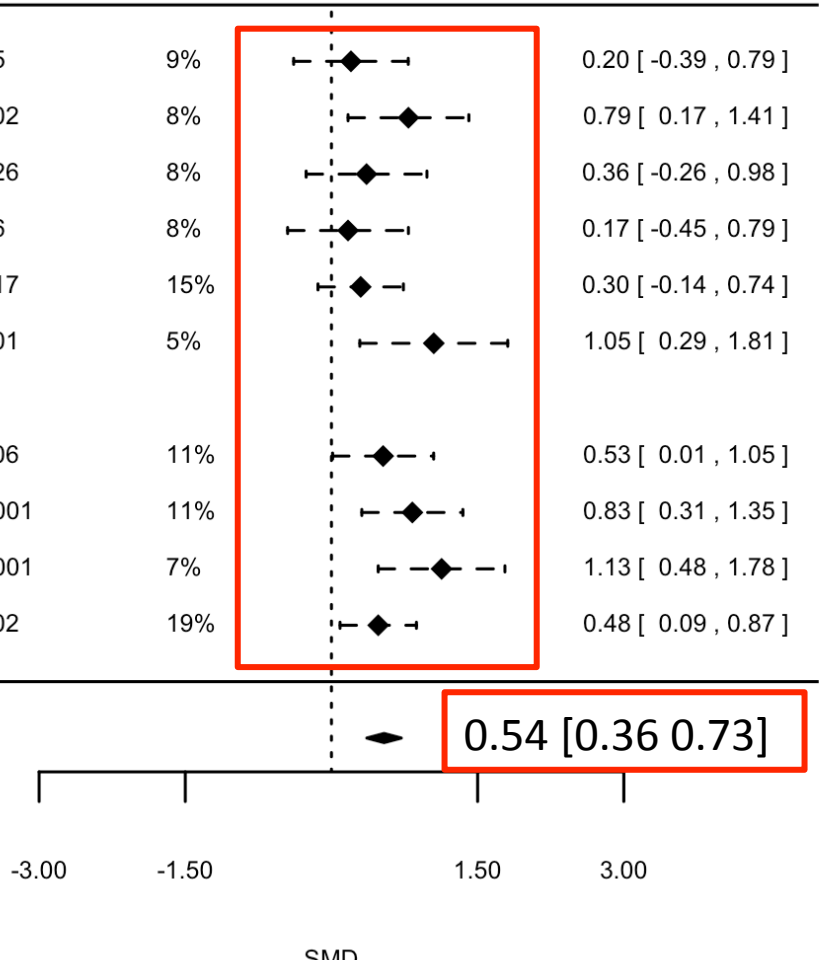

[a] Effect size over experiment 1a
[b] Combined effect size over both types of generalization and set size
[c] Effect size for set size x = 24
[d] Effect size for set size x = 12
[e] Combined effect size for set size x = 2

Results

Step 1: overall effect

Controls outperform SLI

g = 0.54 [0.37; 0.72] p<.001

Absence of heterogeneity

Q (9) = 10.9451, p = .2795

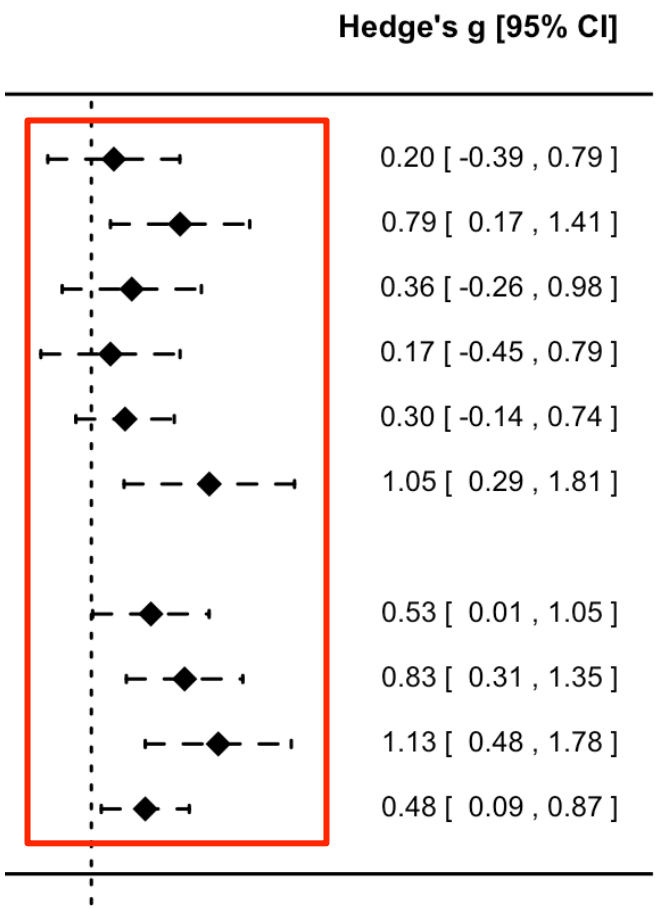

Results

Step 2: Word segmentation versus grammatical structures

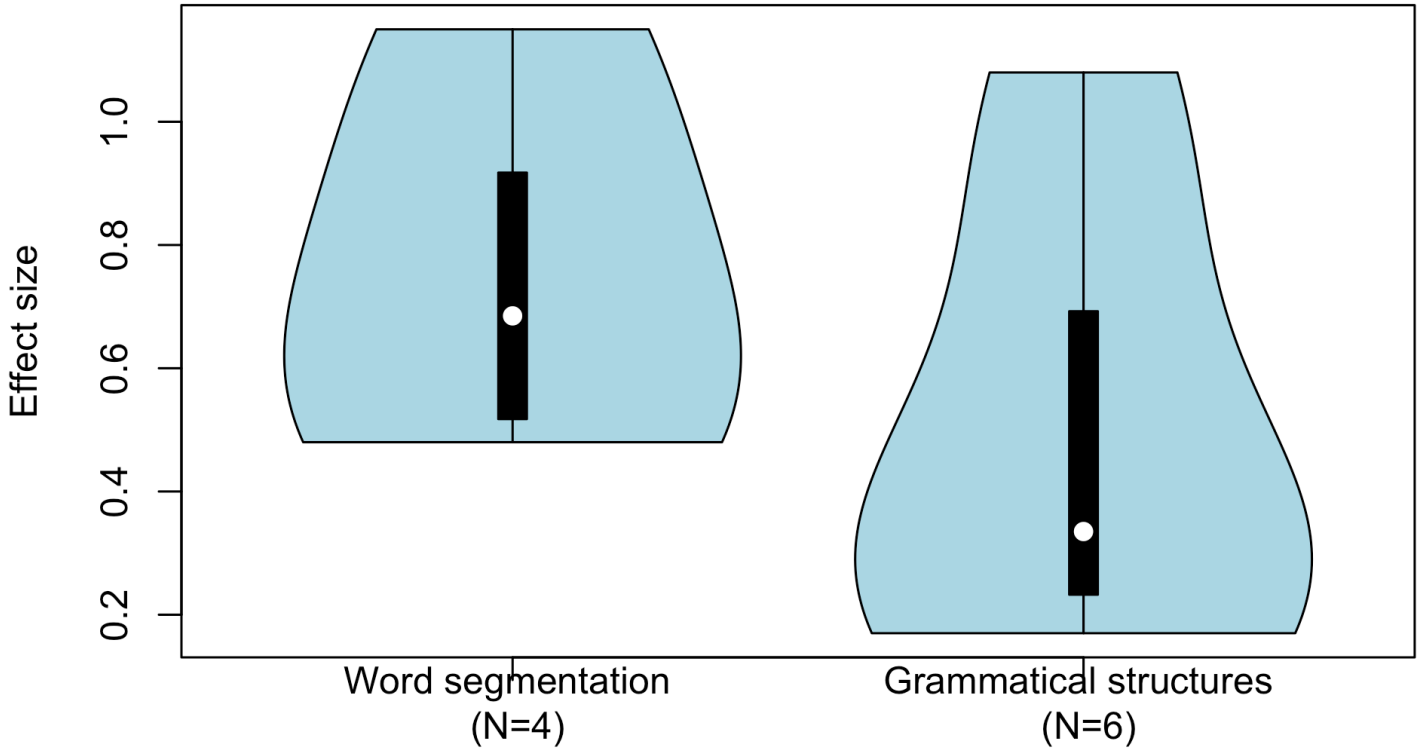

g = 0.67 [0.41; 0.93]
p<.001

g = 0.42 [0.18; 0.66]
p<.001

Results

Step 2: Word segmentation versus grammatical structures

Controls outperform SLI at both levels

Word segmentation vs. Grammatical structures
$z = 1.40$ $p = .161$

Conclusion & Discussion

Conclusion & Discussion

Controls outperform individuals with SLI on auditory verbal statistical learning tasks

Procedural learning deficit hypothesis

[…] for both word segmentation as well as grammatical structures

Nonadjacent dependency vs adjacent dependency learning

Conclusion & Discussion

More studies are needed

E.g. meta regression with age

E.g. influence of other linguistic cues (prosody)

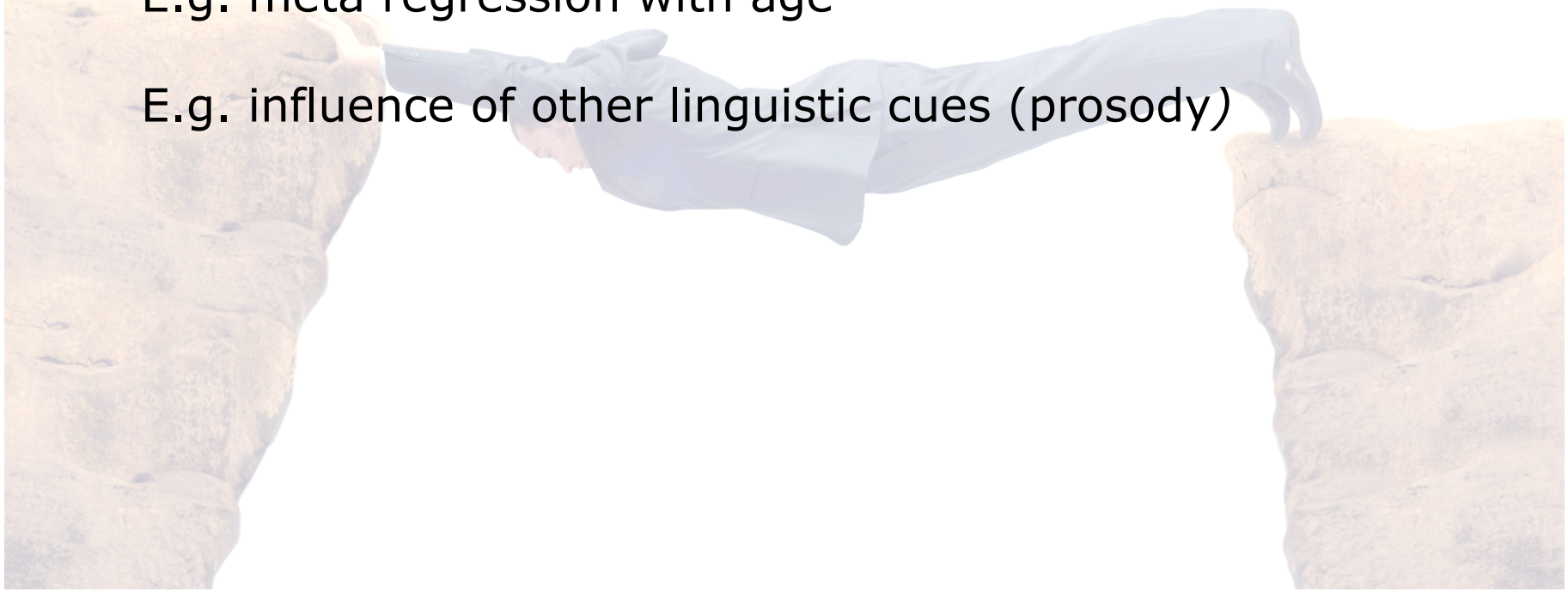

Thanks to

All authors that provided additional data

Julia Evans
Eileen Heabig
Julie Hsu
Agnes Lukacs

Literature search

Sascha Couvee

Statistical feedback

Jarrad Lum
Sho Tsuji

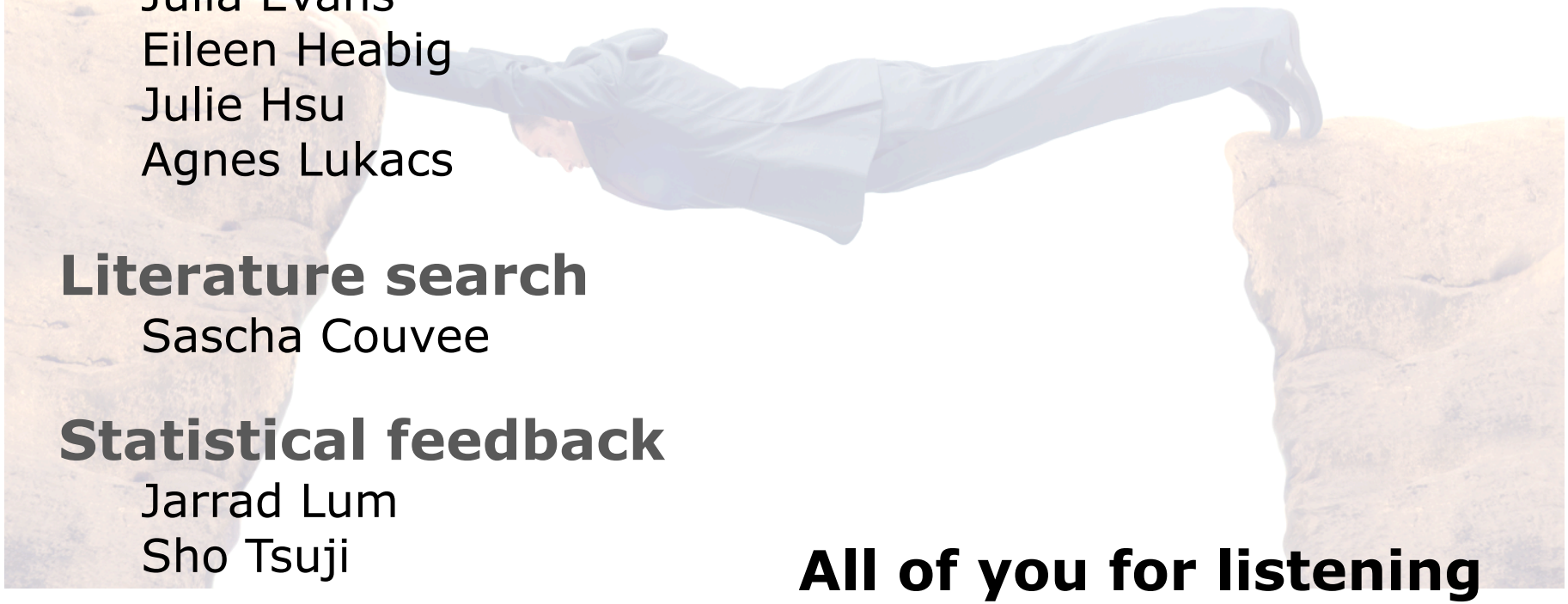

All of you for listening